DS-2CD3083G2-IU
8 MP Acusense Fixed Bullet Network Camera



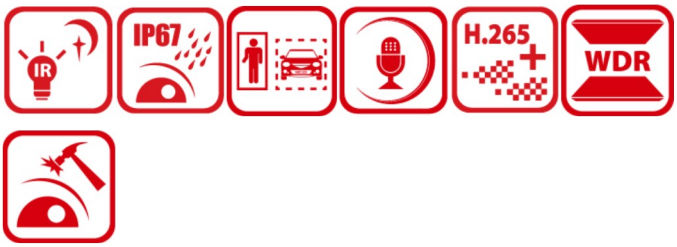

Hikvision has been dedicated to develop products with security since established. Hikvision always follows security by design principle and has adopted many methods of security technologies into our product development lifecycle, including terminal security, data security, application security, network security, and privacy protection. In the meantime, the security technologies used by Hikvision are all in compliance with local applicable laws and safety regulations. These security measures could enhance product's cyber security protection capability and protect your devices as well as your data from malicious cyber attacks.

- High quality imaging with 8 MP resolution
- Efficient H.265+ compression technology
- Clear imaging against strong back light due to 120 dB true WDR technology
- Focus on human and vehicle classification based on deep learning
- Built-in microphone for real-time audio security
- Water and dust resistant (IP67) and vandal-resistant (IK10)

Specification

Model		DS-2CD3083G2-IU
Camera	Image Sensor	1/2.8" Progressive Scan CMOS
	Max. Resolution	3840 × 2160
	Min. Illumination	Color: 0.005 Lux @ (F1.6, AGC ON), B/W: 0 Lux with IR
	Shutter Time	1/3 s to 1/100,000 s
	Day & Night	IR cut filter
	Angle Adjustment	Pan: 0° to 360°, tilt: 0° to 90°, rotate: 0° to 360°
Lens	Lens Type	Fixed focal lens, 2.8, 4, and 6 mm optional
	Focal Length & FOV	2.8 mm, horizontal FOV 108°, vertical FOV 59°, diagonal FOV 127° 4 mm, horizontal FOV 88°, vertical FOV 44°, diagonal FOV 105° 6 mm, horizontal FOV 54°, vertical FOV 29°, diagonal FOV 63°
	Lens Mount	M12
	Iris Type	Fixed
	Aperture	F1.6
	Depth of Field	2.8 mm: 1.7 m to ∞ 4 mm: 2.6 m to ∞ 6 mm: 5.8 m to ∞
DORI	DORI	2.8 mm, D: 84 m, O: 33 m, R: 16 m, I: 8 m 4 mm, D: 117 m, O: 46 m, R: 23 m, I: 11 m 6 mm, D: 176 m, O: 70 m, R: 35 m, I: 17 m
Illuminator	Supplement Light Type	IR
	Supplement Light Range	Up to 40 m
	Smart Supplement Light	Yes
	IR Wavelength	850 nm
Video	Main Stream	50 Hz: 25 fps (3840 × 2160) 25 fps (3200 × 1800, 2688 × 1520, 1920 × 1080, 1280 × 720) 60 Hz: 24 fps (3840 × 2160) 30 fps (3200 × 1800, 2688 × 1520, 1920 × 1080, 1280 × 720)
	Sub-Stream	50 Hz: 25 fps (1280 × 720, 640 × 480, 640 × 360) 60 Hz: 30 fps (1280 × 720, 640 × 480, 640 × 360)
	Third Stream	50 Hz: 10 fps (1920 × 1080, 1280 × 720, 640 × 480, 640 × 360) 60 Hz: 10 fps (1920 × 1080, 1280 × 720, 640 × 480, 640 × 360) *Third stream is supported under certain settings.
	Video Compression	Main stream: H.265/H.264/H.264+/H.265+ Sub-stream: H.265/H.264/MJPEG Third stream: H.265/H.264

		*Third stream is supported under certain settings.
	Video Bit Rate	32 Kbps to 16 Mbps
	H.264 Type	Baseline Profile/Main Profile/High Profile
	H.265 Type	Main Profile
	Scalable Video Coding (SVC)	H.264 and H.265 encoding
	Bit Rate Control	CBR,VBR
	Region of Interest (ROI)	5 fixed regions for main stream and sub-stream
	Target Cropping	Yes
Audio	Audio Compression	G.711/G.722.1/G.726/MP2L2/PCM/MP3/AAC-LC
	Audio Bit Rate	64 Kbps (G.711ulaw/G.711alaw)/16 Kbps (G.722.1)/16 Kbps (G.726)/32 to 192 Kbps (MP2L2)/8 to 320 Kbps (MP3)/16 to 64 Kbps (AAC-LC)
	Audio Sampling Rate	8 kHz/16 kHz/32 kHz/44.1 kHz/48 kHz
	Environment Noise Filtering	Yes
Network	Protocols	TCP/IP, ICMP, HTTP, HTTPS, FTP, DHCP, DNS, DDNS, RTP, RTSP, RTCP, NTP, UPnP, SMTP, IGMP, 802.1X, QoS, IPv4, IPv6, UDP, Bonjour, SSL/TLS, PPPoE, SNMP, WebSocket, WebSockets
	Simultaneous Live View	Up to 6 channels
	API	Open Network Video Interface (Profile S, Profile G), ISAPI, SDK, ISUP
	User/Host	Up to 32 users 3 user levels: administrator, operator, and user
	Security	Password protection, complicated password, HTTPS encryption, IP address filter, Security Audit Log, basic and digest authentication for HTTP/HTTPS, TLS 1.1/1.2, WSSE and digest authentication for Open Network Video Interface
	Network Storage	NAS (NFS, SMB/CIFS),Auto Network Replenishment (ANR), Together with high-end Hikvision memory card, memory card encryption and health detection are supported.
	Client	iVMS-4200, Hik-Connect, Hik-Central
	Web Browser	Plug-in required live view: IE 10, IE 11, Plug-in free live view: Chrome 57.0+, Firefox 52.0+, Edge 89+, Local service: Chrome 57.0+, Firefox 52.0+, Edge 89+
Image	Image Parameters Switch	Yes
	Image Settings	Rotate mode
	Day/Night Switch	Day, Night, Auto, Schedule
	Wide Dynamic Range (WDR)	120 dB

	SNR	≥ 52 dB
	Image Enhancement	BLC, HLC, 3D DNR
	Privacy Mask	8 programmable polygon privacy masks
Interface	Ethernet Interface	1 RJ45 10 M/100 M self-adaptive Ethernet port
	On-Board Storage	Built-in memory card slot, support microSD/microSDHC/microSDXC card, up to 512 GB
	Reset Key	Yes
	Built-in Microphone	Yes,1 built-in microphone
Event	Basic Event	Motion detection (human and vehicle targets classification), video tampering alarm, exception
	Smart Event	Unattended baggage detection, object removal detection, loitering detection, people gathering detection, people running detection, parking detection, video quality diagnosis
	Linkage	Upload to FTP/NAS/memory card,notify surveillance center,send email,trigger recording,trigger capture
Deep Learning Function	Face Capture	Yes
	Perimeter Protection	Line crossing, intrusion, region entrance, region exiting Support alarm triggering by specified target types (human and vehicle)
General	Power	12 VDC ± 25%, reverse polarity protection, 0.5 A, max. 6 W, Ø5.5 mm coaxial power plug PoE: IEEE 802.3af, Class 3, max. 7.5 W
	Material	Metal
	Dimension	Ø74.4 mm × 179.2 mm (Ø2.9" × 7.1")
	Package Dimension	216 mm × 121 mm × 118 mm (8.6" × 4.8" × 4.7")
	Weight	Approx. 510 g (1.1 lb.)
	With Package Weight	Approx. 750 g (1.7 lb.)
	Storage Conditions	-30 °C to 60 °C (-22 °F to 140 °F). Humidity 95% or less (non-condensing)
	Startup and Operating Conditions	-30 °C to 60 °C (-22 °F to 140 °F). Humidity 95% or less (non-condensing)
	Language	33 languages: English, Russian, Estonian, Bulgarian, Hungarian, Greek, German, Italian, Czech, Slovak, French, Polish, Dutch, Portuguese, Spanish, Romanian, Danish, Swedish, Norwegian, Finnish, Croatian, Slovenian, Serbian, Turkish, Korean, Traditional Chinese, Thai, Vietnamese, Japanese, Latvian, Lithuanian, Portuguese (Brazil), Ukrainian
	General Function	Heartbeat,mirror,flash log,password reset via email,pixel counter,anti-banding
Approval	EMC	CE-EMC: EN 55032:2015+A1:2020, EN 50130-4:2011+A1:2014, EN IEC 61000-3-2:2019+A1:2021, EN 61000-3-3:2013+A1:2019+A2:2021, RCM: AS/NZS CISPR 32: 2015, IC: ICES-003: Issue 7
	Safety	UL: UL 62368-1, CB: IEC 62368-1: 2014+A11,

		CE-LVD: EN 62368-1:2014/A11:2017, BIS: IS 13252 (Part 1): 2010/IEC 60950-1:2005, LOA: IEC/EN 60950-1
	Environment	CE-RoHS: 2011/65/EU, WEEE: 2012/19/EU, Reach: Regulation (EC) No 1907/2006
	Protection	IP67: IEC 60529-2013,IK10: IEC 62262:2002

▪ Typical Application

Hikvision products are classified into three levels according to their anti-corrosion performance. Refer to the following description to choose for your using environment.

This model has NO SPECIFIC PROTECTION.

Level	Description
Top-level protection	Hikvision products at this level are equipped for use in areas where professional anti-corrosion protection is a must. Typical application scenarios include coastlines, docks, chemical plants, and more.
Moderate protection	Hikvision products at this level are equipped for use in areas with moderate anti-corrosion demands. Typical application scenarios include coastal areas about 2 kilometers (1.24 miles) away from coastlines, as well as areas affected by acid rain.
No specific protection	Hikvision products at this level are equipped for use in areas where no specific anti-corrosion protection is needed.

▪ Available Model

DS-2CD3083G2-IU(2.8mm)(B)

DS-2CD3083G2-IU(4mm)(B)

DS-2CD3083G2-IU(6mm)(B)

▪ Dimension

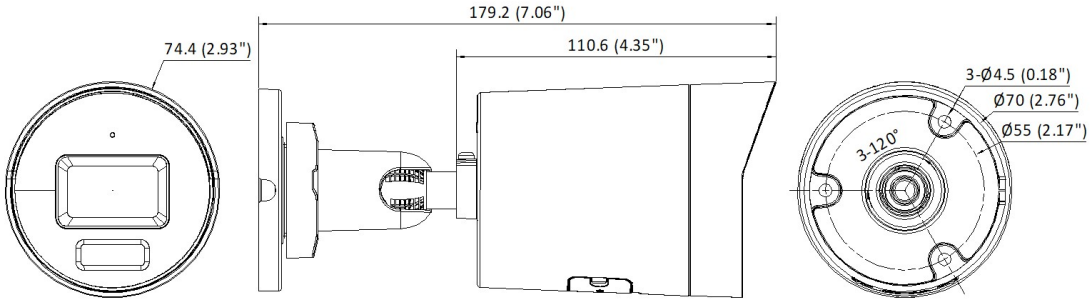

Unit: mm (inch)

▪ Accessory

▪ Optional

DS-1275ZJ-SUS Vertical pole mount	DS-1276ZJ-SUS Corner mount	DS-1280ZJ-XS Junction box
		
	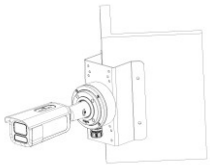	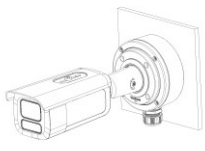

See Far, Go Further

www.hikvision.com
support@hikvision.com

© Hangzhou Hikvision Digital Technology Co., Ltd. Unless otherwise agreed, Hikvision makes no warranties, express or implied. We reserve the right to introduce modifications without notice.

HIKVISION®