DS-2CD3386G2-IS(U)(H)
8 MP AcuSense Fixed Turret Network Camera





Empowered by deep learning algorithms, Hikvision AcuSense technology brings human and vehicle targets classification alarms to front- and back-end devices. The system focuses on human and vehicle targets, vastly improving alarm efficiency and effectiveness.
Hikvision has been dedicated to develop products with security since established.
Hikvision always follows security by design principle and has adopted many methods of security technologies into our product development lifecycle, including terminal security, data security, application security, network security, and privacy protection.
In the meantime, the security technologies used by Hikvision are all in compliance with local applicable laws and safety regulations. These security measures could enhance product's cyber security defense capability and protect your devices as well as your data from malicious cyber attacks.

- Supports Hikvision Embedded Open Platform (HEOP) and importing third party applications
- Supports 1.5 Tops computing power, 40 MB system memory, 350 MB smart RAM, and 2 GB eMMC storage for sharing resources
- High quality imaging with 8 MP resolution
- Excellent low-light performance with powered-by-DarkFighter technology
- Efficient H.265+ compression technology
- Clear imaging against strong back light due to 120 dB true WDR technology
- Focus on human and vehicle targets classification based on deep learning
- Water and dust resistant (IP67)

▪ Specification

Camera	
Image Sensor	1/1.8" Progressive Scan CMOS
Min. Illumination	Color: 0.003 Lux @ (F1.6, AGC ON), B/W: 0 Lux with IR
Max. Resolution	3840 × 2160
Day & Night	IR cut filter
Shutter Time	1/3 s to 1/100,000 s
Angle Adjustment	Pan: 0° to 360°, tilt: 0° to 75°, rotate: 0° to 360°
Lens	
Lens Type	Fixed focal lens, 2.8, 4, and 6 mm optional
Focal Length & FOV	2.8 mm: horizontal FOV 108°, vertical FOV 53°, diagonal FOV 133° 4 mm: horizontal FOV 87°, vertical FOV 46°, diagonal FOV 103° 6 mm: horizontal FOV 60°, vertical FOV 35°, diagonal FOV 68°
Aperture	F1.6
Lens Mount	M12
Iris Type	Fixed
DORI	
DORI	2.8 mm, D: 97 m, O: 38 m, R: 19 m, I: 9 m 4 mm, D: 111 m, O: 44 m, R: 22 m, I: 11 m 6mm, D: 140 m, O: 55 m, R: 28 m, I: 14 m
Illuminator	
Supplement Light Range	Up to 40 m
IR Wavelength	850 nm
Smart Supplement Light	Yes
Supplement Light Type	IR
HEOP	
Open Resources	Memory: 40 MB, Smart RAM: 350 MB, eMMC: 2 GB
Computing Power	1.5 TOPS
Open Capability	HEOP 2.0 OpendevSDK
Deep Learning Structure	Caffe,PyTorch,TensorFlow,PaddlePaddle,ONNX
Programming Language	C,C++
Video	
Main Stream	50 Hz: 25 fps (3840 × 2160, 3200 × 1800, 2688 × 1520, 1920 × 1080, 1280 × 720) 60 Hz: 24 fps (3840 × 2160) 30 fps (3200 × 1800, 2688 × 1520, 1920 × 1080, 1280 × 720)
Sub-Stream	50 Hz: 25 fps (1280 × 720, 640 × 480, 640 × 360) 60 Hz: 30 fps (1280 × 720, 640 × 480, 640 × 360)
Third Stream	50 Hz: 10 fps (1920 × 1080, 1280 × 720, 640 × 480, 640 × 360) 60 Hz: 10 fps (1920 × 1080, 1280 × 720, 640 × 480, 640 × 360)
Fourth Stream	50 Hz: 10 fps (1280 × 720, 640 × 480, 640 × 360) 60 Hz: 10 fps (1280 × 720, 640 × 480, 640 × 360)

Video Compression	Main stream: H.265/H.264/H.264+/H.265+, Sub-stream: H.265/H.264/MJPEG, Third stream: H.265/H.264, Fourth stream: H.265/H.264/MJPEG
Video Bit Rate	32 Kbps to 16 Mbps
H.264 Type	Baseline Profile,Main Profile,High Profile
H.265 Type	Main Profile
Bit Rate Control	CBR,VBR
Scalable Video Coding (SVC)	H.264 and H.265 encoding
Region of Interest (ROI)	5 fixed regions for main stream and sub-stream
Target Cropping	Yes
Audio	
Audio Compression	G.711/G.722.1/G.726/MP2L2/PCM/MP3/AAC-LC
Audio Type	Mono sound
Audio Bit Rate	64 Kbps (G.711ulaw/G.711alaw)/16 Kbps (G.722.1)/16 Kbps (G.726)/32 to 192 Kbps (MP2L2)/8 to 320 Kbps (MP3)/16 to 64 Kbps (AAC-LC)
Audio Sampling Rate	8 kHz/16 kHz/32 kHz/44.1 kHz/48 kHz
Environment Noise Filtering	Yes
Network	
Protocols	TCP/IP, ICMP, HTTP, HTTPS, FTP, DHCP, DNS, DDNS, RTP, RTSP, NTP, UPnP, SMTP, IGMP, 802.1X, QoS, IPv4, IPv6, UDP, Bonjour, SSL/TLS, PPPoE, SFTP, ARP, SNMP, WebSocket, WebSockets, SRTP
Simultaneous Live View	Up to 6 channels
API	ONVIF (Profile S, Profile G, Profile T),ISAPI,SDK,ISUP
User/Host	Up to 32 users 3 user levels: administrator, operator, and user
Security	Password protection, complicated password, HTTPS encryption, 802.1X authentication (EAP-TLS, EAP-LEAP, EAP-MD5), watermark, IP address filter, basic and digest authentication for HTTP/HTTPS, WSSE and digest authentication for Open Network Video Interface, RTP/RTSP over HTTPS, control timeout settings, security audit log, TLS 1.1/1.2/1.3, host authentication (MAC address)
Network Storage	NAS (NFS, SMB/CIFS),Auto Network Replenishment (ANR), Together with high-end Hikvision memory card, memory card encryption and health detection are supported.
Client	iVMS-4200,Hik-Connect,Hik-Central
Web Browser	Plug-in required live view: IE 10, IE 11, Plug-in free live view: Chrome 57.0+, Firefox 52.0+, Edge 89+, Local service: Chrome 57.0+, Firefox 52.0+, Edge 89+
Image	
Image Parameters Switch	Yes
Image Settings	Rotate mode,saturation,brightness,contrast,sharpness,gain,white balance,adjustable by client software or web browser
Day/Night Switch	Day,Night,Auto,Schedule
Wide Dynamic Range (WDR)	120 dB
Image Enhancement	BLC,HLC,3D DNR,Defog
SNR	≥ 52 dB

Privacy Mask	4 programmable polygon privacy masks
Interface	
Audio	1 input (line in), two-core terminal block, max. input amplitude: 3.3 Vpp, input impedance: 4.7 KΩ, interface type: non-equilibrium, 1 output (line out), two-core terminal block, max. output amplitude: 3.3 Vpp, output impedance: 100 Ω, interface type: non-equilibrium
Ethernet Interface	1 RJ45 10 M/100 M self-adaptive Ethernet port
On-Board Storage	Built-in memory card slot, support microSD/microSDHC/microSDXC card, up to 512 GB
Built-in Microphone	-U: Yes
Reset Key	Yes
Power Output	12 VDC, max. 100 mA
Alarm	1 input, 1 output (max. 12 VDC, 30 mA)
Event	
Basic Event	Motion detection (support alarm triggering by specified target types (human and vehicle)),video tampering alarm,exception
Smart Event	scene change detection,audio exception detection,defocus detection, unattended baggage detection,object removal detection
Linkage	Upload to FTP/NAS/memory card,notify surveillance center,send email,trigger alarm output,trigger recording,trigger capture,audible warning
Deep Learning Function	
Face Capture	Yes
People Counting	Yes
Perimeter Protection	Line crossing, intrusion, region entrance, region exiting Support alarm triggering by specified target types (human and vehicle)
General	
Power	12 VDC ± 25%, 0.66 A, max. 8 W,Ø5.5 mm coaxial power plug,reverse polarity protection, PoE: IEEE 802.3af, Class 3, max. 9.5 W
Material	Metal except for trim ring
Dimension	Ø127.3 mm × 96.3 mm (Ø5" × 3.8")
Package Dimension	170 mm × 170 mm × 150 mm (6.69" × 6.69" × 5.91")
Weight	Approx. 640 g (1.4 lb.)
With Package Weight	Approx. 880 g (1.9 lb.)
Storage Conditions	-30 °C to 60 °C (-22 °F to 140 °F). Humidity 95% or less (non-condensing)
Startup and Operating Conditions	-30 °C to 60 °C (-22 °F to 140 °F). Humidity 95% or less (non-condensing)
General Function	Heartbeat,anti-banding,mirror,flash log,password reset via email,pixel counter
Language	33 languages: English, Russian, Estonian, Bulgarian, Hungarian, Greek, German, Italian, Czech, Slovak, French, Polish, Dutch, Portuguese, Spanish, Romanian, Danish, Swedish, Norwegian, Finnish, Croatian, Slovenian, Serbian, Turkish, Korean, Traditional Chinese, Thai, Vietnamese, Japanese, Latvian, Lithuanian, Portuguese (Brazil), Ukrainian

Approval	
EMC	CE-EMC: EN 55032: 2015, EN 61000-3-2:2019, EN 61000-3-3: 2013+A1:2019, EN 50130-4: 2011 +A1: 2014, RCM: AS/NZS CISPR 32: 2015, IC: ICES-003: Issue 7, KC: KN32: 2015, KN35: 2015
Safety	UL: UL 62368-1, CB: IEC 62368-1: 2014+A11, CE-LVD: EN 62368-1: 2014/A11: 2017, BIS: IS 13252 (Part 1): 2010/IEC 60950-1: 2005
Environment	CE-RoHS: 2011/65/EU, WEEE: 2012/19/EU, Reach: Regulation (EC) No 1907/2006
Protection	IP67: IEC 60529-2013

▪ Typical Application

Hikvision products are classified into three levels according to their anti-corrosion performance. Refer to the following description to choose for your using environment.

This model has NO SPECIFIC PROTECTION.

Level	Description
Top-level protection	Hikvision products at this level are equipped for use in areas where professional anti-corrosion protection is a must. Typical application scenarios include coastlines, docks, chemical plants, and more.
Moderate protection	Hikvision products at this level are equipped for use in areas with moderate anti-corrosion demands. Typical application scenarios include coastal areas about 2 kilometers (1.24 miles) away from coastlines, as well as areas affected by acid rain.
No specific protection	Hikvision products at this level are equipped for use in areas where no specific anti-corrosion protection is needed.

▪ Dimension

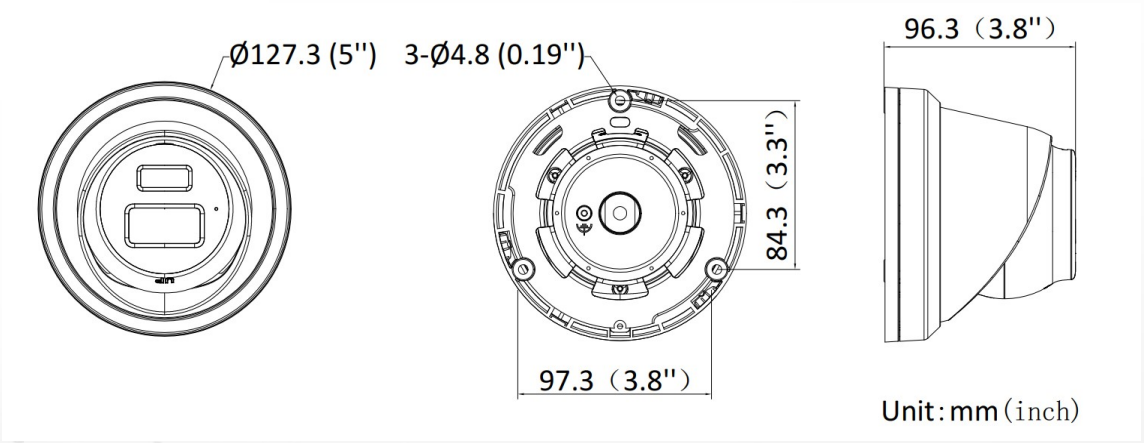

▪ Accessory

▪ Optional

DS-1475ZJ-SUS	DS-1273ZJ-130-TRL	DS-1273ZJ-130B-TRL	DS-1280ZJ-DM8	DS-1276ZJ-SUS
				
DS-1275ZJ-SUS	**DS-1275ZJ-S-SUS**	**DS-220AZJ-145-WA**	**DS-220AZJ-130-WA**	**DS-1281ZJ-M**
				
DS-1476ZJ-SUS	**DS-1271ZJ-130-TRL**			
				

▪ Installation Methods

Vertical Pole Mounting DS-1475ZJ-SUS+DS-220AZJ-130-WA	Vertical Pole Mounting DS-1275ZJ-SUS+DS-1281ZJ-M	Vertical Pole Mounting DS-1275ZJ-S-SUS+DS-220AZJ-145-WA	Wall Mounting DS-1273ZJ-130-TRL	Wall Mounting DS-1273ZJ-130B-TRL
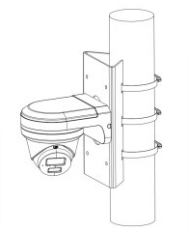	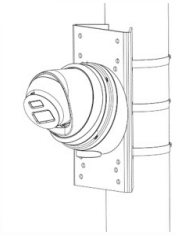	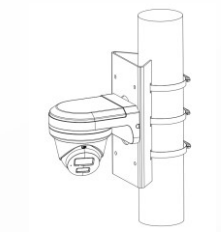		
Wall Mounting DS-220AZJ-145-WA	**Wall Mounting DS-220AZJ-130-WA**	**Junction Box DS-1280ZJ-DM8**	**Corner Mounting DS-1276ZJ-SUS+DS-1273ZJ-130-TRL**	**Corner Mounting DS-1476ZJ-SUS+DS-220AZJ-145-WA**

				
Inclined Ceiling Mounting DS-1281ZJ-M	**Pendant Mounting DS-1271ZJ-130-TRL**			
				

See Far, Go Further

www.hikvision.com
support@hikvision.com

© Hangzhou Hikvision Digital Technology Co., Ltd. Unless otherwise agreed, Hikvision makes no warranties, express or implied. We reserve the right to introduce modifications without notice.

HIKVISION®