DS-2CD5546G0-IZHS(A)
4 MP DarkFighter Varifocal Dome Network Camera



Empowered by deep learning algorithms, Hikvision AcuSense technology brings human or vehicle target classification alarms to front- and back-end devices. The system can greatly reduce false alarms generated by targets other than humans or vehicles, vastly improving alarm efficiency and effectiveness.

- High quality imaging with 4 MP resolution
- Efficient H.265+ compression technology
- Clear imaging against strong backlight due to 140 dB WDR technology
- Motorized varifocal lens for easy installation and monitoring
- Excellent low-light performance with DarkFighter technology
- False alarm reduction through human and vehicle target classification based on deep learning
- Anti-IR Reflection
- Audio and alarm interface available
- Water and dust resistant (IP67) and vandal-resistant (IK10)

▪ Specification

Camera	
Image Sensor	1/1.8'' Progressive Scan CMOS
Min. Illumination	0.0014 Lux @ (F1.4, AGC ON), 0 Lux with IR on
Shutter Speed	1/3 s to 1/100,000 s
Slow Shutter	Yes
P/N	P/N
Wide Dynamic Range	140 dB
Day & Night	ICR Cut
Angle Adjustment	Pan: 0° to 355°, tilt: 0° to 75°, rotate: 0° to 355°
Lens	
Iris Type	P-Iris
Lens Mount	Integrated
Lens Type & FOV	2.8 to 12 mm, horizontal FOV 114.5° to 41.8°, vertical FOV 59.3° to 23.6°, diagonal FOV 141.1° to 48.1° 8 to 32 mm, horizontal FOV 42.5° to 15.1°, vertical FOV 23.4° to 8.6°, diagonal FOV 49.6° to 17.3°
Aperture	2.8 to 12 mm: F1.2 to F2.5 8 to 32 mm: F1.8
DORI	
DORI	2.8 to 12 mm: D: 61.2 m to 151.7 m, O: 24.3 m to 60.2 m, R: 12.2 m to 30.3 m, I: 6.1 m to 15.2 m 8 to 32 mm: D: 150.3 m to 400 m, O: 59.7 m to 158.7 m, R: 30.1 m to 80 m, I: 15 m to 40 m
Illuminator	
IR Range	2.8 to 12 mm: up to 40 m 8 to 32 mm: up to 60 m
Wavelength	850 nm
Smart Supplement Light	Yes
Video	
Max. Resolution	2688 × 1520
Main Stream	50Hz: 25 fps (2688 × 1520, 2304 × 1296, 1920 × 1080, 1280 × 720) 60Hz: 30 fps (2688 × 1520, 2304 × 1296, 1920 × 1080, 1280 × 720)
Sub-Stream	50Hz: 25 fps (640 × 480, 640 × 360, 320 × 240) 60Hz: 30 fps (640 × 480, 640 × 360, 320 × 240)
Third Stream	50Hz: 15 fps (1280 × 720, 640 × 480, 640 × 360, 320 × 240) 60Hz: 15 fps (1280 × 720, 640 × 480, 640 × 360, 320 × 240)
Fourth Stream	50Hz: 15 fps (1280 × 720, 640 × 480, 640 × 360, 320 × 240) 60Hz: 15 fps (1280 × 720, 640 × 480, 640 × 360, 320 × 240) *Fourth stream is supported under certain settings.
Video Bit Rate	32 Kbps to 8 Mbps

Video Compression	Main stream: H.265/H.264/H.264+/H.265+ Sub-stream: H.265/H.264/MJPEG Third stream: H.265/H.264 Fourth stream: H.265/H.264/MJPEG
H.264 Type	Baseline Profile/Main Profile/High Profile
H.265 Type	Main Profile
H.264+	Main stream supports
H.265+	Main stream supports
Bit Rate Control	CBR/VBR
Scalable Video Coding (SVC)	Yes
Region of Interest (ROI)	5 fixed regions for main stream and sub-stream
e-PTZ	Support Preset and Patrol settings *Only the fourth stream supports this function.
Audio	
Environment Noise Filtering	Yes
Audio Sampling Rate	8 kHz/16 kHz/32 kHz/44.1 kHz/48 kHz
Audio Compression	G.711ulaw/G.711alaw/G.722.1/G.726/MP2L2/PCM/MP3
Audio Bit Rate	64Kbps(G.711ulaw/G.711alaw)/16Kbps(G.722.1)/16Kbps(G.726)/32-192Kbps(MP2L2)/8-320Kbps(MP3)
Network	
Smooth Streaming	Yes
Simultaneous Live View	Up to 6 channels
API	Open Network Video Interface (PROFILE S, PROFILE G, PROFILE T), ISAPI, SDK
Protocols	TCP/IP, ICMP, HTTP, HTTPS, FTP, DHCP, DNS, DDNS, RTP, RTSP, NTP, UPnP, SMTP, IGMP, 802.1X, QoS, IPv4, IPv6, UDP, Bonjour, SSL/TLS, PPPoE, SFTP, ISUP, ARP, SNMP
User/Host	Up to 32 users. 3 user levels: administrator, operator and user
Security	Password protection, complicated password, HTTPS encryption, IP address filter, Security Audit Log, basic and digest authentication for HTTP/HTTPS, TLS 1.2, WSSE and digest authentication for Open Network Video Interface, memory card encryption, SFTP encryption, SRTP encryption
Network Storage	MicroSD/SDHC/SDXC card (256 GB) local storage, and NAS (NFS, SMB/CIFS), auto network replenishment (ANR), FTP ANR
Client	iVMS-4200, Hik-Connect, Hik-Central
Web Browser	Plug-in required live view: IE 10, IE 11 Plug-in free live view : Chrome 57.0+, Firefox 52.0+ Local service: Chrome 57.0+, Firefox 52.0+
Image	
Day/Night Switch	Day, Night, Auto, Schedule
Target Cropping	Yes
Image Enhancement	BLC, HLC, 3D DNR, EIS, Defog
Image Parameters Switch	Yes
Image Settings	Rotate mode, saturation, brightness, contrast, sharpness, gain, white balance adjustable by client software or web browser
Interface	
Alarm	2 inputs, 2 outputs (max. 24 VDC, 1 A; 24 VAC, 1 A)

Audio	1 input (line in), max. input amplitude: 3.3 vpp, input impedance: 4.7 KΩ, interface type: non-equilibrium; 1 output (line out), max. output amplitude: 3.3 vpp, output impedance: 100 Ω, interface type: non-equilibrium
Video Output	1 Vp-p Composite Output (75Ω/CVBS)
On-board Storage	Built-in micro SD/SDHC/SDXC slot, up to 256 GB
Hardware Reset	Yes
Communication Interface	1 RJ45 10M/100M self-adaptive Ethernet port
Power Output	12 VDC, 100 mA
Heater	Yes
Event	
Basic Event	Motion detection, video tampering alarm, exception (network disconnected, IP address conflict, illegal login, HDD full, HDD error)
Smart Event	Unattended baggage detection, object removal detection, scene change detection, audio exception detection, video quality diagnosis
Deep Learning Function	
Face Capture	Yes
Perimeter Protection	Line crossing detection, intrusion detection, region entrance detection, region exiting detection
General	
Linkage Method	Upload to NAS/memory card, notify surveillance center, trigger record, trigger capture, audible warning, FTP, Email
Web Client Language	33 languages English, Russian, Estonian, Bulgarian, Hungarian, Greek, German, Italian, Czech, Slovak, French, Polish, Dutch, Portuguese, Spanish, Romanian, Danish, Swedish, Norwegian, Finnish, Croatian, Slovenian, Serbian, Turkish, Korean, Traditional Chinese, Thai, Vietnamese, Japanese, Latvian, Lithuanian, Portuguese (Brazil), Ukrainian
General Function	Anti-flicker, heartbeat, mirror, privacy mask, flash log, password reset via e-mail, pixel counter
Software Reset	Yes
Storage Conditions	-40 °C to 60 °C (-40 °F to 140 °F). Humidity 95% or less (non-condensing)
Startup and Operating Conditions	-40 °C to 60 °C (-40 °F to 140 °F). Humidity 95% or less (non-condensing)
Power Supply	12 VDC ± 25% 24 VAC ± 20% PoE
Power Consumption	PoE: max. 10 W
Power Interface	Two-core terminal block
Camera Dimension	Ø162 × 140 mm (Ø6.4" × 5.6")
Package Dimension	251 × 215 × 189 mm (9.9” × 8.5” × 7.4”)
Camera Weight	Approx. 1420 g (3.1 lb.)
With Package Weight	Approx. 2058 g (4.5 lb.)

Approval	
EMC	FCC SDoC (47 CFR Part 15, Subpart B); CE-EMC (EN 55032: 2015, EN 61000-3-2: 2014, EN 61000-3-3: 2013, EN 50130-4: 2011 +A1: 2014); RCM (AS/NZS CISPR 32: 2015); IC VoC (ICES-003: Issue 6, 2016); KC (KN 32: 2015, KN 35: 2015)
Safety	UL (UL 60950-1); CB (IEC 60950-1:2005 + Am 1:2009 + Am 2:2013, IEC 62368-1:2014); CE-LVD (EN 60950-1:2005 + Am 1:2009 + Am 2:2013, IEC 62368-1:2014); BIS (IS 13252(Part 1):2010+A1:2013+A2:2015); LOA (IEC/EN 60950-1)
Environment	CE-RoHS (2011/65/EU); WEEE (2012/19/EU); Reach (Regulation (EC) No 1907/2006)
Protection	IP67 (IEC 60529-2013), IK10 (IEC 62262:2002)

▪ Available Model

DS-2CD5546G0-IZHS(A) (2.8 to 12 mm)

▪ Dimension

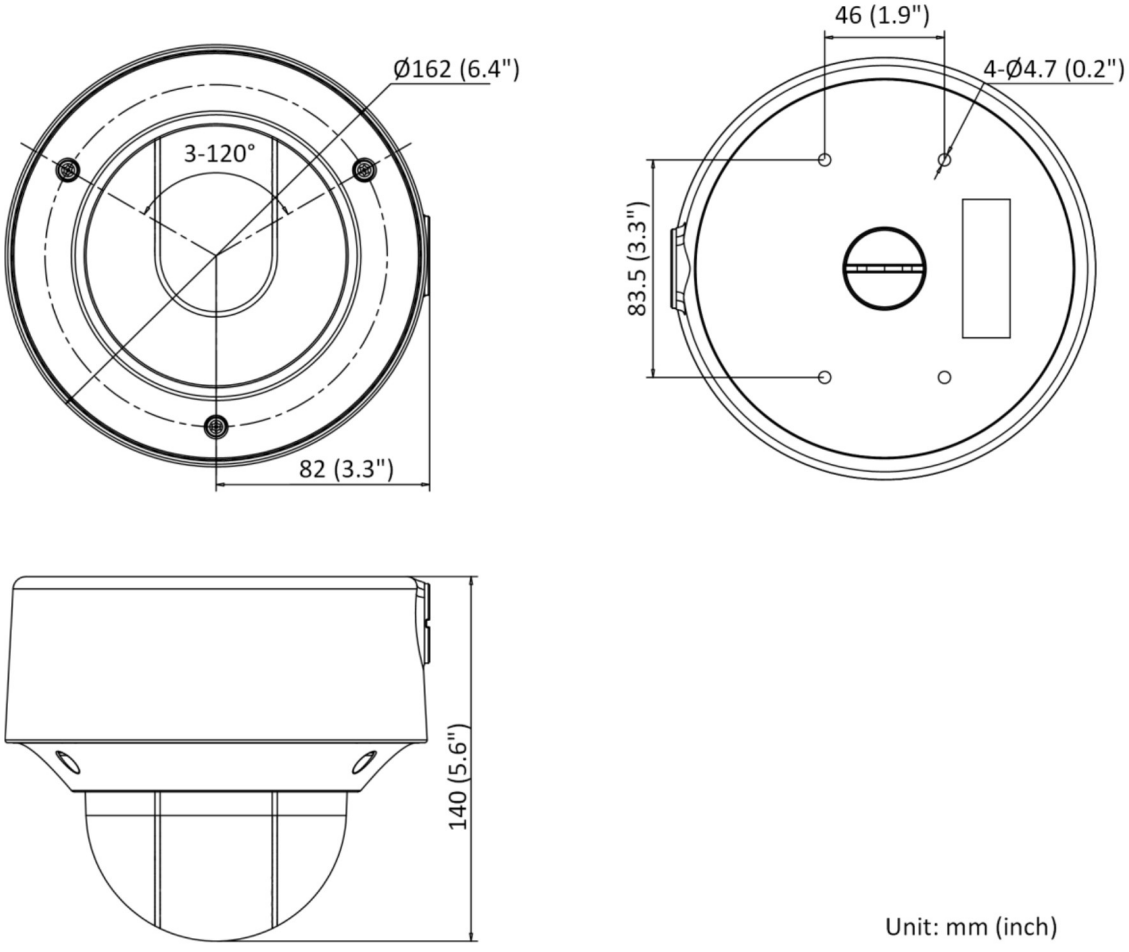

Unit: mm (inch)

▪ Accessory

▪ Optional

DS-1475ZJ-SUS Vertical Pole Mount	DS-1476ZJ-SUS Corner Mount	DS-1227ZJ-DM42 In-Ceiling Mount	DS-1473ZJ-155B Wall Mount	DS-1471ZJ-155 Pendant Mount
				

DS-1473ZJ-155 Wall Mount	DS-1253ZJ-L Rain Shade	DS-1250ZJ Rain Shade
		

Distributed by

HIKVISION

Headquarters
No.555 Qianmo Road, Binjiang District,
Hangzhou 310051, China
T +86-571-8807-5998
overseasbusiness@hikvision.com

Hikvision USA
T +1-909-895-0400
sales.usa@hikvision.com

Hikvision Europe
T +31-23-5542770
sales.eu@hikvision.com

Hikvision UK & Ireland
T +01628-902140
sales.uk@hikvision.com

Hikvision UAE
T +971-4-4432090
salesme@hikvision.com

Hikvision Russia
T +7-495-669-67-99
saleru@hikvision.com

Hikvision Australia
T +61-2-8599-4233
salesau@hikvision.com

Hikvision Italy
T +39-0438-6902
info.it@hikvision.com

Hikvision South Africa
Tel: +27 (10) 0351172
sale.africa@hikvision.com

Hikvision Singapore
T +65-6684-4718
sg@hikvision.com

Hikvision Korea
T +82-(0)31-731-8817
sales.korea@hikvision.com

Hikvision India
T +91-22-28469900
sales@pramahikvision.com

Hikvision Brazil
T +55 11 3318-0050
Latam.support@hikvision.com

Hikvision France
T +33(0)1-85-330-450
info.fr@hikvision.com

Hikvision Spain
T +34-91-737-16-55
info.es@hikvision.com

Hikvision Poland
T +48-22-460-01-50
info.pl@hikvision.com

Hikvision Canada
T +1-866-200-6690
sales.canada@hikvision.com

Hikvision Turkey
T +90 (216)521 7070- 7074
sales.tr@hikvision.com

Hikvision Kazakhstan
T +7-727-9730667
nikia.panfilov@hikvision.ru

Hikvision Tashkent
T +99-87-1238-9438
uzb@hikvision.ru

Hikvision Indonesia
T +62-21-2933759
Sales.Indonesia@hikvision.com

Hikvision Thailand
T +662-275-9949
sales.thailand@hikvision.com

Hikvision Malaysia
T +601-7652-2413
sales.my@hikvision.com

Hikvision Vietnam
T +84-974270888
sales.vt@hikvision.com

Hikvision Hong Kong
T +852-2151-1761
info.hk@hikvision.com

Hikvision Colombia
sales.colombia@hikvision.com

© Hikvision Digital Technology Co., Ltd. 2020 | Data subject to change without notice |